IN THE UNITED STATES DISTRICT COURT
FOR THE SOUTHERN DISTRICT OF TEXAS
HOUSTON DIVISION

WESTERN FALCON, INC. and WAGON TRAIL VENTURES, INC. Plaintiffs, vs. MOORE ROD & PIPE, LLC and MOORE PIPE INC. Defendants	§ § § § § § § § § §	Case No. _____ **JURY DEMAND**

ORIGINAL COMPLAINT

Plaintiffs Western Falcon, Inc. ("Western Falcon") and Wagon Trail Ventures, Inc. ("Wagon Trail") (collectively, "Plaintiffs") bring this action against defendants Moore Rod & Pipe, LLC ("Moore") and Moore Pipe Inc. ("MPI") (collectively, "Defendants") and allege:

THE PARTIES

1. Plaintiff Western Falcon is a Texas corporation, organized and existing under the laws of the State of Texas with a principal place of business in Humble, Texas. Western Falcon is a wholly-owned subsidiary of Wagon Trail.

2. Plaintiff Wagon Trail is a Texas corporation, organized and existing under the laws of the State of Texas with a principal place of business in Humble, Texas.

3. Wagon Trial owns all right, title and interest in and to U.S. Patent No. Re 36,362 (Exhibit 1) (the "'362 patent"), and acquired such ownership by assignment. Western Falcon is an exclusive licensee under the '362 patent.

4. Defendant Moore is a Texas limited liability company, organized and existing under the laws of the State of Texas and has an office in Humble, Texas, in this Judicial District.

Moore may be served with process through its registered agent, Capitol Corporate Services, Inc., 800 Brazos, Suite 400, Austin, Texas 78701.

5. On information and belief, Defendant MPI is a corporation organized and existing under the laws of Alberta, Canada, with a registered office at 219 6203 – 28 Avenue, Edmonton, Alberta, Canada T6L 6K3. Pursuant to Fed. R. Civ. P. 4(f), service may be made on Defendant MPI using a variety of methods including, but not limited to, International Registered Mail pursuant to Article 10(a) of the Hague Service Convention.

JURISDICTION AND VENUE

6. This Court has personal jurisdiction over Defendant Moore, which has transacted business in this Judicial District. For example, Moore has published a website (www.moorerodandpipe.com) showing 1250 Indiana Street, Humble Texas as its "corporate address" and domestic office. On information and belief, Moore has transmitted emails from that office to potential customers in Texas in an effort to secure orders for its products, including at least one email containing the false advertising that is one of the subjects of this lawsuit. The Houston Business Journal has quoted Moore as having "plans to begin operations by mid-2013 and be staffed with 30 people by the end of the year." On information and belief, Moore is constructing, or has already constructed, its manufacturing facility at its Humble location, including 31,000 square feet of building space. Also, on information and belief, Moore's tortious interference has taken place from its Humble location.

7. This Court also has personal jurisdiction over Defendant MPI, which has transacted business in this Judicial District in connection with the subject matter of this litigation. For example, on information and belief: MPI is a part owner of Moore; MPI's president Russel Moore is an officer ("Manager") of Moore; MPI has licensed the precise technology that is the

subject matter of this litigation to Moore; MPI has actively assisted Moore in setting up its operations in this Judicial District; MPI shares with Moore the same patent law firm that has rendered legal opinions concerning the patent-in-suit; MPI is transmitting technical and marketing information to Moore in this Judicial District with a purpose and effect of enabling Moore to induce infringement in this Judicial District; and MPI has previously shipped Shurflo lined tubular products and/or polymer used to make such products and/or extruded liners to Moore in this Judicial District, intending for such Shurflo tubular products to be ultimately delivered to customers in Texas and used to directly infringe the patent-in-suit.

8. This Court has original subject-matter jurisdiction over the federal law claims in this action, pursuant to 28 U.S.C. § 1331 (federal question), 15 U.S.C. §§ 1051 *et seq*. (the Lanham Act), 28 U.S.C. §§ 2201 and 2202 (the Declaratory Judgments Act), and 35 U.S.C. §§ 101 *et seq*. (Patent Act). The Texas state law claims share a common nucleus of operative facts with the federal law claims, and this Court has supplemental jurisdiction over the Texas state law claims under 28 U.S.C. § 1367.

9. Venue is proper in this Judicial District under 28 U.S.C. §§ 1391 and 1400.

COUNT ONE:
FALSE ADVERTISING UNDER THE LANHAM ACT

10. Plaintiff Western Falcon realleges and incorporates by reference the allegations in paragraphs 1-9.

11. Defendant Moore has publicly announced that it intends to supply "Shurflo" polymer-lined tubular products ("Products") to consumers. As of October 2013, Moore's website indicates that it is currently providing those Products to consumers. On information and belief, at least some of the Products have been imported to Defendant Moore from Canada by Defendant MPI. Also, on information and belief, Moore has begun

manufacturing its own Products in the Houston area. On information and belief, Moore is making its Products using polymers that are made outside Texas and shipped to its Humble facility, either before or after being extruded.

12. On information and belief, Defendant Moore has made one or more false and misleading statements about its Products to one or more potential buyers of the Products, including the statement that its Shurflo SF3 product "will withstand working temperatures between 350 to 400F," as well as the statement that "the use of MRP's products does not infringe the above referenced patent when used only as part of a pipe string." Those statements are false and/or misleading.

13. On information and belief, those statements actually deceived, or had the capacity to deceive, at least one potential buyer. On information and belief, the polymer used in the SF3 Product had been transported in interstate commerce and/or SF3 Product had been imported from Canada in interstate commerce.

14. Western Falcon is likely to suffer injury as a result of those statements and/or actually has suffered injury from those statements and is also likely to suffer injury as a result of any statement indicating or implying that any Shurflo product is capable of withstanding working temperatures, or any actual downhole temperatures in an oil or gas producing well, above 350 degrees F and/or up to 400 degrees F ("Temperature Statements"), or that use of its Product "only as a part of a pipe string" does not infringe the patent.

15. Moore's actions complained above constitute false advertising under the Lanham Act, 15 U.S.C. § 1125(a).

16. Western Falcon has been damaged as a result of Moore's false statements, and Moore is also profiting, or has the capacity to profit, from its false statements. Accordingly, Western Falcon is entitled to an injunction and recovery of damages and of Moore's profits.

17. On information and belief, Defendant Moore's false statements have been made willfully, entitling Western Falcon to enhanced damages and attorney's fees under 15 U.S.C. § 1117(a).

COUNT TWO:
DECLARATORY JUDGMENT OF FALSE ADVERTISING

18. Plaintiff Western Falcon realleges and incorporates by reference the allegations in paragraphs 1-17.

19. Pursuant to the provisions of 28 U.S.C. §§ 2201 and 2202, a real, immediate and justiciable controversy exists between Western Falcon and Moore with respect to the Temperature Statements.

20. On information and belief, the Temperature Statements are false and/or misleading.

21. On information and belief, the Temperature Statements have actually deceived, or had the capacity to deceive, at least one potential buyer; and if such Temperature Statements continue to be made to other potential buyers, they have the capacity to deceive those other potential buyers.

22. Western Falcon is likely to suffer injury and to be damaged as a result of the false and/or misleading Temperature Statements.

23. Western Falcon requests a declaration by the Court that the false and/or misleading Temperature Statements constitute false advertising under the Lanham Act, 15 U.S.C. § 1125(a).

COUNT THREE:
DECLARATORY JUDGMENT
FOR INDUCEMENT OF INFRINGEMENT BY MOORE

24. Plaintiffs reallege and incorporate by reference the allegations in paragraphs 1-23.

25. Pursuant to the provisions of 28 U.S.C. §§ 2201 and 2202 a real, immediate and justiciable controversy exists between Plaintiffs and Moore with respect to Moore's inducement of infringement of the '362 patent, and between Plaintiffs and MPI with respect to MPI's inducement of infringement of the '362 patent.

26. Certain customers of Moore who produce oil or gas from wells using rod pumping systems will perform such production using lined tubing sections that include Shurflo Products supplied by Moore ("Moore Accused Methods").

27. Plaintiffs contend that any customer who practices the Moore Accused Methods will directly infringe one or more claims of the '362 patent.

28. On information and belief, Defendant Moore has taken a number of concrete steps in preparation for inducing infringement of the '362 patent and has evidenced its intent to induce direct infringement of the '362 patent. On information and belief, Defendant MPI has been actively assisting Moore in such preparations and inducement, including but not limited to supplying Products and/or polymer to Moore and information pursuant to a license agreement, and information designed for presentation to Moore customers that encourage infringement.

29. On information and belief, as of the filing of this lawsuit, Moore: has the capability to manufacture Shurflo Products at its facility in Humble, Texas; has the equipment, employees, and technical know-how sufficient to manufacture Shurflo Products; and has already begun to manufacture such Shurflo Products at that facility and/or has imported Shurflo Products to its facility from MPI.

30. Moore has been advertising, marketing, and otherwise promoting the use of Shurflo Products for use in rod pumping wells with the knowledge that use of Shurflo Products in rod pumping wells that produce oil or gas will directly infringe the '362 patent. On its website (www.moorerodandpipe.com), on the "Shurflo Tubular Linings" page, one of seven bullet points under the phrase "Shur-Flo Liner Advantages" is the statement: "Reduced rod and tubing friction means reduced peak polish rod load." On information and belief, that information was provided to Moore by MPI.

31. As of October 4, 2013, Moore's website states that Moore "is a leading innovator in the area of artificial lift and our products are proven to enhance these applications utilizing our ENDLESS ROD™, Coated Rod and Shurflo Tubular Lining." That website also identifies Shurflo Tubular Linings as "a plastic liner which has proven to eliminate corrosion and dramatically reduce sucker rod wear in artificially lifted wells." That website demonstrates that Moore is not acting alone, but rather with MPI.

32. Moore has had communications with one or more Western Falcon customers ("Customer Communications").

33. In one or more of those Customer Communications, Moore promoted its Shurflo Products to the customer(s) for use in rod pumping wells, and promoted the Products in performing a Moore Accused Method.

34. In one or more of those Customer Communications, Moore made the representation that, based on consultation with its patent attorneys, it is "confident that the use of MRP's products does not infringe the above-referenced patent when used only as a part of a pipe string."

35. Moore's representation that "the use of MRP's products does not infringe the above-referenced patent when used only as a part of a pipe string" is incorrect, and Moore either knew or reasonably should have known that the representation was incorrect.

36. Claims 1 and 2 of the '362 patent each recites: "An improved method of producing well fluids from a well being produced by a rod pumping system, said rod pumping system comprising [the elements recited in the remainder of each claim]."

37. To the extent any of Moore's customers obtain Shurflo Products, install the Products in a well configured to produce fluids (oil and/or gas) using a rod pumping system, and perform a method of production using that rod pumping system with Shurflo Products as set forth below, Plaintiffs contend that such customer will directly infringe at least Claims 1 and 2 of the '362 patent.

38. In the methods of Claim 1 and 2, the rod pumping system comprises "a plurality of sucker rods disposed within a string of tubing which extends into said well."

39. Correspondingly, in the Moore Accused Methods, each of the rod pumping systems used by Moore's Shurflo customers will comprise (include) a "plurality of sucker rods disposed within a string of tubing which extends into said well," as recited in Claims 1 and 2.

40. In the methods of Claims 1 and 2, "the string of tubing compris[es] of a plurality of tubing sections each having a bore and an inside diameter."

41. Correspondingly, in the Moore Accused Methods, any "string of tubing" used by a customer will comprise (include) a "plurality of tubing sections," and each of those tubing sections will have "a bore and an inside diameter," as recited in Claims 1 and 2.

42. In the methods of Claims 1 and 2, the rod pumping system comprises "a down hole pump operably connected to said sucker rods."

43. Correspondingly, in the Moore Accused Methods, each rod pumping system will include a "down hole pump operably connected to said sucker rods," as recited in Claims 1 and 2.

44. In the methods of Claims 1 and 2, the rod pumping system comprises "means for reciprocating said sucker rods."

45. Correspondingly, in the Moore Accused Methods, each rod pumping system also includes the "means for reciprocating said sucker rods," as recited in Claims 1 and 2.

46. Claims 1 and 2 each recites that "the improved method comprises using tubing sections having polymer liners disposed within said bore of said tubing sections to eliminate contact between said sucker rods and said tubing string when said sucker rods are being reciprocated."

47. Correspondingly, the Moore Accused Methods comprise "using tubing sections having polymer liners disposed within said bore of said tubing sections to eliminate contact between said sucker rods and said tubing string when said sucker rods are being reciprocated," as recited in Claims 1 and 2.

48. Claim 2 recites that the "liners comprise a polyethylene material."

49. Correspondingly, in the Moore Accused Methods, the liners used in the Products each comprises a polyethylene material.

50. Moore has been, and still is, encouraging and inducing its actual and/or potential customers to use its Shurflo Products in Moore Accused Methods. On information and belief, MPI has been assisting in such encouragement and inducement.

51. Moore has been, and still is, encouraging and inducing its actual and/or potential customers to use its Shurflo Products in a way that directly infringes one or more claims of the '362 patent including, but not limited to, Claims 1 and 2 as set forth above.

52. By June 11, 2013, or earlier, Moore and MPI have been aware of the '362 patent.

53. By June 11, 2013, or earlier, Moore and MPI been aware of how the use of Shurflo by Moore's customers would result in direct infringement. Accordingly, any activity undertaken or continued by Moore since June 11, 2013, or earlier, has been with notice and knowledge of the patent and has been willful and deliberate.

54. Pursuant to the provisions of 28 U.S.C. §§ 2201 and 2202, Western Falcon requests a declaration by the Court that any conduct by Moore and MPI that encourages customers to use Moore's Shurflo Products in manner that directly infringes any claim of the '362 patent constitutes inducement of infringement in violation of 35 U.S.C. § 271(b), where such conduct includes providing Products to customers who use such Products in a production well that uses a rod pumping system with sucker rods.

55. As a result of any inducement by Moore and MPI, Western Falcon would be irreparably damaged to an extent not yet determined. As such, Western Falcon requests that Moore be enjoined by this Court, temporarily and permanently, from committing any acts declared by the Court to constitute inducement of infringement under 35 U.S.C. § 271(b).

COUNT FOUR:
INDUCEMENT OF INFRINGEMENT BY MPI

56. Plaintiffs reallege and incorporate by reference the allegations in paragraphs 1-55.

57. On information and belief, as summarized below, MPI has committed inducement of infringement in violation of 35 U.S.C. § 271(b). For many years, MPI has been advertising its Shurflo Products, including advertisements on its website (www.moorepipe.com). That website

has included a downloadable PDF brochure that lists "rod pumping oil wells" as one of the "lined tubing applications" for the Shurflo products and touts "less rod wear" as one of the advantages of its Shurflo Products. However, MPI is a Canadian company, and Plaintiffs have not been aware of any sales of Products to end-users inside the United States—until recently.

58. On information and belief, in the first quarter of 2013, if not earlier, MPI has begun to import quantities of Shurflo Products to at least one of its distributors in the United States with knowledge that the distributor would be supplying those Products to at least one end-user who would be using the Products in rod pumping production wells in the United States ("MPI Accused Methods").

59. Plaintiffs contend that any customer who has practiced the MPI Accused Methods has directly infringed one or more claims of the '362 patent.

60. On information and belief, at least one of those end-users—Surge Energy, Inc.—has actually installed Shurflo Products in oil or gas wells and begun producing fluids (e.g., oil and/or gas) using MPI's Shurflo Products, using the MPI Accused Methods.

61. Claims 1 and 2 of the '362 patent each recites: "An improved method of producing well fluids from a well being produced by a rod pumping system, said rod pumping system comprising [elements recited in the remainder of the claim]."

62. Correspondingly, on information and belief, Surge Energy, and possibly others, have performed the MPI Accused Methods, including one or more methods of producing well fluids from a well being produced by a rod pumping system, comprising the elements recited in Claims 1 and 2, and thus have directly infringed the '362 patent.

63. In the methods of Claims 1 and 2, the rod pumping system comprises "a plurality of sucker rods disposed within a string of tubing which extends into said well."

64. Correspondingly, in the MPI Accused Methods, each of the rod pumping systems used by Surge Energy, and possibly other MPI's Shurflo customers, comprises (includes) a "plurality of sucker rods disposed within a string of tubing which extends into said well," as recited in Claims 1 and 2.

65. In the methods of Claims 1 and 2, "the string of tubing compris[es] of a plurality of tubing sections each having a bore and an inside diameter."

66. Correspondingly, in the MPI Accused Methods performed by Surge Energy and possibly other end-users, any "string of tubing" used by Surge Energy or that customer comprises (includes) a "plurality of tubing sections," and each of those tubing sections has "a bore and an inside diameter," as recited in Claims 1 and 2.

67. In the method of Claims 1 and 2, the rod pumping system comprises "a down hole pump operably connected to said sucker rods."

68. Correspondingly, in the MPI Accused Methods, each rod pumping system includes a "down hole pump operably connected to said sucker rods," as recited in Claims 1 and 2.

69. In the method of Claims 1 and 2, the rod pumping system comprises "means for reciprocating said sucker rods."

70. Correspondingly, in the MPI Accused Methods, each rod pumping system also comprises (includes) the "means for reciprocating said sucker rods" recited in Claims 1 and 2.

71. Claims 1 and 2 each recites that "the improved method comprises using tubing sections having polymer liners disposed within said bore of said tubing sections to eliminate contact between said sucker rods and said tubing string when said sucker rods are being reciprocated."

72. Correspondingly, the MPI Accused Methods likewise comprise "using tubing sections having polymer liners disposed within said bore of said tubing sections to eliminate contact between said sucker rods and said tubing string when said sucker rods are being reciprocated," as recited in Claims 1 and 2.

73. Claim 2 recites that the "liners comprise a polyethylene material."

74. Correspondingly, in the MPI Accused Methods, the liners used in the Products each comprise a polyethylene material.

75. On information and belief, MPI has been, and still is, encouraging and inducing its actual and/or potential customers to use its Products in a way that directly infringes one or more claims of the '362 patent including, but not limited to, Claims 1 and 2, as set forth above.

76. MPI was first notified of the '362 patent at least as early as April 19, 2013.

77. On information and belief, on or about April 19, 2013, MPI received, via Federal Express, a copy of the '362 patent and a summary of how the use of the Products infringes the '362 patent. By April 19, 2013, or earlier, MPI was aware of that patent and how the use of the Products would result in direct infringement. Accordingly, any activity undertaken or continued by MPI on April 19, 2013, or later, has been with notice and knowledge of the patent and has been willful and deliberate.

78. The conduct by MPI that has encouraged customers, including Surge Energy, to use MPI's Shurflo polymer-lined tubing in manner that directly infringes one or more claims of the '362 patent constitutes inducement of infringement in violation of 35 U.S.C. § 271(b).

79. As a result of the inducement by MPI, Western Falcon will be—and has been—irreparably damaged to an extent not yet determined. As such, Western Falcon requests that MPI

be enjoined by this Court, temporarily and permanently, from committing any inducement of infringement under 35 U.S.C. § 271(b).

COUNT FIVE:
TORTIOUS INTERFERENCE WITH ACTUAL AND POTENTIAL CUSTOMERS

80. Plaintiff Western Falcon realleges and incorporates by reference the allegations in paragraphs 1-79.

81. On information and belief, Defendant Moore has published one or more false and/or misleading statements to existing or potential customers of Western Falcon, including the Temperature Statements, and also the statement that "the use of MRP's products does not infringe the above referenced patent when used only as part of a pipe string." (See Counts One and Two.) On information and belief, such statements were made maliciously, intentionally, and without just cause or excuse.

82. On information and belief, there is and has been a reasonable probability that Western Falcon would have maintained, renewed, or entered into a business relationship and/or valid contract with such existing or potential customer(s).

83. On information and belief, Moore was aware of the existing relationship and/or contract(s) between Western Falcon and the existing or potential customers and intended for these false, misleading, and disparaging statements to have interfered with Western Falcon's existing and/or potential contracts or business relationships with such existing and/or potential customers.

84. On information and belief, Western Falcon has suffered actual damages, and the published statements by Moore to potential and/or existing customers of Western Falcon were the proximate cause of the financial loss to Western Falcon.

COUNT SIX:
TORTIOUS INTERFERENCE WITH WESTERN FALCON EMPLOYEE

85. Plaintiff Western Falcon realleges and incorporates by reference the allegations in paragraphs 1-84.

86. On or about October 9, 2012, Western Falcon entered into a valid Non-Compete and Nondisclosure Agreement with one of its employees, George Palmer ("Palmer Agreement"). During his employment with Western Falcon, Mr. Palmer received confidential information and trade secrets of Western Falcon, including Western Falcon Information (see Count Seven), and Mr. Palmer's job duties with Western Falcon was to sell Western Falcon lined tubular products and to encourage customers to use the lined tubular products in a manner covered by the '362 patent. The information he communicated to customers included the temperature capabilities of the lined tubular products. Mr. Palmer's customer base included Texas.

87. On information and belief, at some point in September 2013, Defendant Moore contacted George Palmer and encouraged Mr. Palmer to quit his employment with Western Falcon and go work for Moore.

88. On information and belief, Moore knew of the Palmer Agreement.

89. On information and belief, Moore knew of the Palmer Agreement and that, by working for Moore Mr. Palmer would be in breach of that Agreement.

90. On information and belief, as an employee of Moore, Mr. Palmer's duties will be similar to his former duties with Western Falcon, e.g., to sell lined tubular products that are directly competitive with Western Falcon, including the Shurflo Products that are the subject of this lawsuit, and to encourage customers to use the Products in a manner covered by the '362 patent. On information and belief, Mr. Palmer's customer base for Moore will be in Texas.

91. On information and belief, Moore hired Mr. Palmer, and encouraged him to breach the Palmer Agreement willfully, intentionally, maliciously, and without just cause or excuse.

92. On information and belief, Western Falcon has suffered actual damages and/or loss as a proximate cause of Moore's intentional act(s)..

COUNT SEVEN:
TRADE SECRET MISAPPROPRIATION

93. Plaintiffs reallege and incorporate by reference the allegations in paragraphs 1-92.

94. On information and belief, Defendant Moore has misappropriated Plaintiffs' trade secrets in violation of the Texas Uniform Trade Secrets Act, Tex. Civ. Prac. & Rem. Code § 134A.002 ("TUTSA"). For example, on information and belief, Moore has acquired, using improper means, technical, business, customer, and financial information relating to Western Falcon polymer liners and lined tubulars, including, but not limited to: (a) the identities of Western Falcon's polymer supplier and its extrusion company; (b) the specific grades of polymers used by Western Falcon to make certain of its lined tubular products; and (c) the specific prices paid by Western Falcon for such polymers (collectively, (a), (b), and (c) are referred to herein as "Polymer Information").

95. The technical, business, customer, and financial information acquired by Moore relating to Western Falcon polymer liners and lined tubulars, including, but not limited to, the Polymer Information ("Western Falcon Information"), qualifies as "trade secrets" under the Texas law. The Western Falcon lined tubular products that are the subject of the trade secrets include Polycore™, Enertube™, UltraTube™ and Extreme Tube™, which are the same products that, when used by customers in a rod pumping well, are covered by the '362 patent. The trade secrets include the temperature capabilities of the liners (see Counts One and Two).

96. The Western Falcon Information derives independent economic value, actual or potential, from not being generally known to, and not being readily ascertainable by proper means by, other persons who can obtain economic value from its disclosure or use.

97. The Western Falcon Information is the subject of efforts that are reasonable under the circumstances to maintain its secrecy.

98. Plaintiffs have suffered injury and actual loss caused by the misappropriation by Moore, and Moore has been unjustly enriched.

99. Plaintiffs are entitled to recover from Moore damages to account for its injury and actual loss, and also for Moore's unjust enrichment resulting from its misappropriation.

100. Plaintiffs are also entitled to a temporary, preliminary, and permanent injunction against Moore for the misappropriation.

DEMAND FOR JURY TRIAL

Plaintiffs Western Falcon and Wagon Trail demand trial by jury on all claims and issues so triable.

PRAYER FOR RELIEF

WHEREFORE, Plaintiffs pray for entry of judgment:

A. Finding that Moore has engaged in false advertising in violation of 15 U.S.C. § 1125(a) and a declaration that Moore's Temperature Statements are false and misleading;

B. Finding that Moore's false advertising has been done deliberately, willfully and recklessly in accordance with 15 U.S.C. § 1117;s

C. Awarding Western Falcon compensatory and exemplary damages associated with or caused by Moore's violations of 15 U.S.C. § 1125(a);

D. Awarding Western Falcon recovery of Moore's profits associated with or caused by Moore's violations of 15 U.S.C. § 1125(a);

E. Ordering that Moore and its officers, directors, agents, employees, representatives, successors, and assigns, if any, as well as those in privity with Moore and those who have acted in concert with Moore, be temporarily and permanently enjoined from engaging in further acts of false advertising;

F. Ordering Moore to engage in corrective advertising, including informing the relevant consumers that its Shurflo Products are not capable of withstanding working temperatures in an oil or gas well of above 350 degrees F or up to 400 degrees F;

G. Finding that Moore has engaged in tortious interference with actual contractual relationships between Western Falcon and its customers and with its employees, including, but not limited to, George Palmer;

H. Awarding Western Falcon damages caused by such interference with actual contractual relationships;

I. Finding that Moore has engaged in tortious interference with prospective contractual relationships;

J. Awarding Western Falcon damages caused by such interference with prospective contractual relationships;

K. Declaring that any conduct by Moore or MPI that encourages customers to perform Moore Accused Methods constitutes inducement of infringement of U.S. Patent No. Re 36,362 in violation of 35 U.S.C. § 271(b), where such conduct includes providing Shurflo Products to customers who use such Shurflo tubing in a production well that uses a rod pumping system with sucker rods;

L. Ordering Moore and MPI and each of their officers, directors, agents, employees, representatives, successors, and assigns, if any, as well as those in privity with Moore or MPI and those who have acted in concert with Moore or MPI, to cease and desist from engaging in any conduct that encourages any end-user to perform Moore Accused Methods, including supplying such end-user with Shurflo Products or to otherwise engage in any conduct that constitutes inducement of infringement of U.S. Patent No. Re 36,362;

M. Finding that MPI has engaged in inducement of infringement in violation of 35 U.S.C. § 271(b) where such conduct has included providing Shurflo Products to customers who use such Shurflo Products in a production well that uses a rod pumping system with sucker rods;

N. Finding MPI jointly and severally liable for all direct infringement induced by MPI and awarding Western Falcon all damages for such infringement, including lost profits and at the very least a reasonable royalty;

O. Finding that MPI's intent to induce infringement has been willful and that all damages recovered as a result of the inducement to infringe be enhanced for up to treble damages;

P. Finding that Moore has misappropriated Plaintiffs' trade secrets;

Q. Awarding Plaintiffs damages for the misappropriation;

R. Ordering that Moore and its officers, directors, agents, employees, representatives, successors, and assigns, if any, as well as those in privity with Moore and those who have acted in concert with Moore, be temporarily and permanently enjoined from using the trade secrets;

S. Finding that MPI's intent to induce infringement has been willful and that all damages recovered as a result of the inducement to infringe be enhanced for up to treble damages;

T. Finding that this is an exceptional case under 35 U.S.C. § 284 against MPI, entitling Western Falcon to recovery of its attorney's fees;

U. Awarding Western Falcon its reasonable attorney's fees and costs for its case against MPI;

V. Awarding Western Falcon pre-judgment and post-judgment interest at the highest rate permitted by law; and

W. Awarding Plaintiffs such other and further relief as the Court may deem just and proper under the circumstances.

Respectfully submitted,

Dated: October 8, 2013

By: /s/ Douglas H. Elliott

Douglas H. Elliott
Attorney-In-Charge
Texas Bar No. 06535900
S.D. Admission No. 7830
delliott@elliottiplaw.com
THE ELLIOTT LAW FIRM
6750 West Loop South, Suite 995
Bellaire, Texas 77401
Telephone: (832) 485-3560
Facsimile: (832) 485-3511

Dale Jefferson
Of Counsel
Texas Bar No. 10607900
S.D. Admission No. 9116
jefferson@mdjwlaw.com
MARTIN, DISIERE, JEFFERSON & WISDOM, LLP
808 Travis, 20th Floor
Houston, Texas 77002
Telephone: (713) 632-1700
Facsimile: (713) 632-0101
COUNSEL FOR PLAINTIFFS

EXHIBIT 1

US00RE36362E

United States Patent [19]

Jackson

[11] E **Patent Number: Re. 36,362**

[45] **Reissued Date of Patent: Nov. 2, 1999**

[54] **POLYMER LINERS IN ROD PUMPING WELLS**

[76] Inventor: **William Evans Jackson**, 6249 Riders Rd., Odessa, Tex. 79762

[21] Appl. No.: **09/069,646**

[22] Filed: **Apr. 29, 1998**

Related U.S. Patent Documents

Reissue of:

[64] Patent No.: **5,511,619**
Issued: **Apr. 30, 1996**
Appl. No.: **08/350,475**
Filed: **Dec. 7, 1994**

[51] **Int. Cl.**[6] **E21B 17/00**; E21B 43/00

[52] **U.S. Cl.** **166/369**; 166/68; 166/242.1; 138/140; 138/146; 92/170.1

[58] **Field of Search** 166/42, 68, 68.5, 166/105, 242.1, 369, 380, 902; 138/140, 141, 143, 146; 92/170.1

[56] **References Cited**

U.S. PATENT DOCUMENTS

4,308,917	1/1982	Dismukes	166/381
4,581,919	4/1986	Sullivan	73/49.5
4,773,479	9/1988	Guy	166/242.4
4,793,409	12/1988	Bridges et al.	166/57
4,852,655	8/1989	Guy	166/380
4,858,688	8/1989	Edwards et al.	166/241.4
4,938,285	7/1990	Edwards et al.	166/241.4
5,099,917	3/1992	Roser	166/51
5,110,644	5/1992	Sparks et al.	428/36.3
5,219,028	6/1993	Martin et al.	166/380
5,271,974	12/1993	Upchurch	138/146 X
5,351,752	10/1994	Wood et al.	166/68

OTHER PUBLICATIONS

Composite Catalog of Oilfied Services, "AMF Tuboscope, Inc.", vol. 1, pp. 156–158, 1984.

Primary Examiner—David J. Bagnell
Attorney, Agent, or Firm—Sidley & Austin

[57] **ABSTRACT**

The installation of an abrasion resistent polymer liner in the production tubing string of a well which is being produced by rod pumping for the principal purpose of reducing rod wear on the tubing string, and wear on the rods and/or the rod couplings. In a preferred embodiment of the invention, the polymer liner is characterized by an extruded polymer material having a high density, which is abrasive resistant, and which has a coefficient of friction that is much lower than the coefficient of friction of metal tubing, such as high density polyethylene.

20 Claims, 1 Drawing Sheet

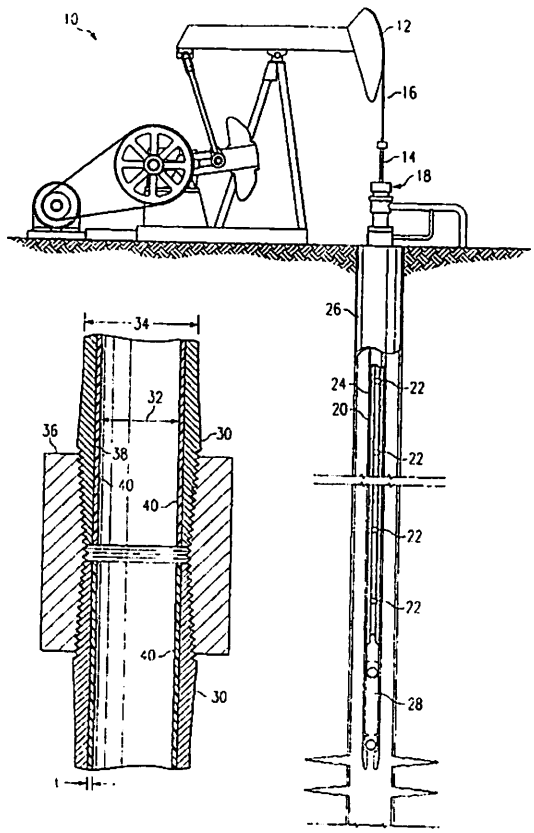

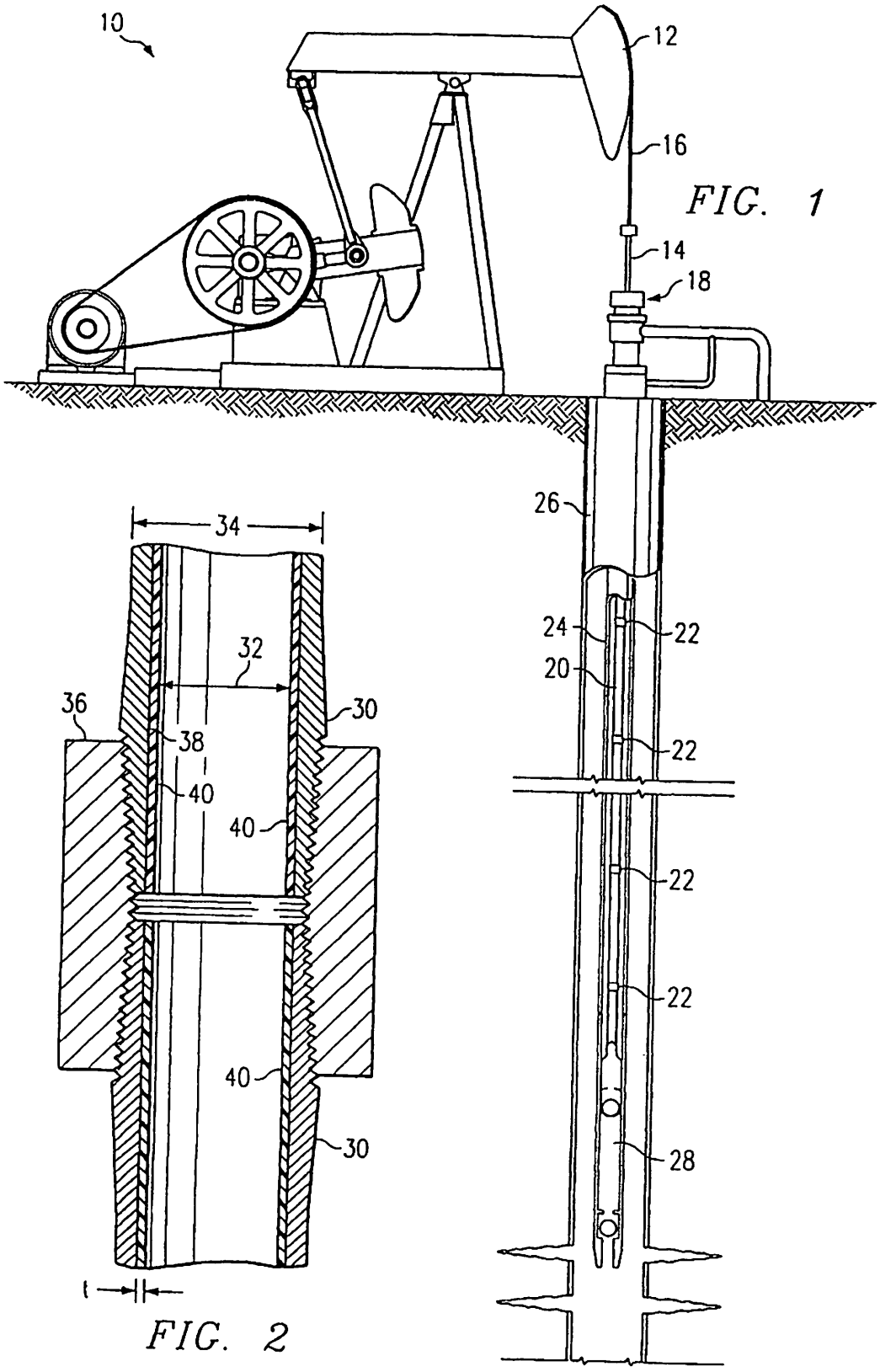

FIG. 1

FIG. 2

POLYMER LINERS IN ROD PUMPING WELLS

Matter enclosed in heavy brackets [ ] appears in the original patent but forms no part of this reissue specification; matter printed in italics indicates the additions made by reissue.

TECHNICAL FIELD OF THE INVENTION

The present invention pertains in general to oil field production equipment and in particular to the use of polymer liners in rod pumping wells.

BACKGROUND OF THE INVENTION

This invention relates to production tubing strings used in oil wells that are being produced by rod pumping, which is the conventional technique for pumping oil from underground reservoirs. At the surface, a motor drives a walking beam which is connected to a polished rod that is in turn connected to a string of sucker rods which extend down the borehole to support the downhole pump. As the motor runs, the walking beam raises and lowers the polished rod and string of sucker rods which causes the pump to lift the fluid from the reservoir up to the surface.

Historically, wells which are produced with conventional rod pumping units have evidenced problems with tubing and/or rod or rod coupling failures due to the abrasion of the rods and rod couplings on the tubing walls as the rod string reciprocates. These failures may be accelerated by the presence of corrosive elements and/or by the deviation of the well bore in drilling or through subsidence. The present invention greatly reduces these failures.

In accordance with the present invention the production tubing joints in a rod-pumped well are lined with polymer liners which reduce the abrasion and failure of the tubing joints caused by the reciprocating rods. The polymer liners, such as high density polyethylene liners, have a coefficient of friction which is far superior to the coefficient of friction of steel tubing. Further, when the polyethylene liner is wetted by the produced fluid, susceptibility to abrasion is further reduced.

Although the lining of pipe and tubing with polymer liners for corrosion control has been practiced heretofore, the lining of tubing strings in rod-pumped wells to reduce the abrasion and failure of the tubing joints caused by the reciprocating rods is novel. For example, liners have been installed in pipelines for the transportation of oil, water, gas and sewage for some time. In the application of polymer lined tubing for oil field tubing strings, the application has been for the protection of tubing utilized for injection strings, water disposal strings, or production strings which flow or which are produced with electric submersible pumps.

The present invention achieves the substantial benefits of protecting the tubing string on a rod pumped well from the detrimental effects to and failures of the production tubing caused by the reciprocating rods as well as protecting the tubing against corrosive elements such as salt water, hydrogen sulfide, carbon dioxide and other corrosive elements produced in oil wells.

It is thus an objective of this invention to utilize polymer liners in the tubing production strings of rod pumping wells for the purpose of eliminating metal to metal contact between the rods, rod couplings and the production tubing string, thereby reducing the frequency of failures due to rod wear, rod coupling wear, and/or production tubing string wear.

Still another object of this invention is to provide protection of the production tubing string of an oil well produced by rod pumping from the corrosive elements of the components of the produced fluid and thereby provide an opportunity to reduce the production costs by reducing the chemical treatment of the well's producing string.

SUMMARY OF THE INVENTION

These and other objectives of the invention are provided in an improved method and system for producing well fluids from a well being produced by a rod pumping system. In accordance with the present invention a rod pumping system comprises a plurality of sucker rods (a sucker rod string) disposed within a string of tubing which extends into an oil well. Connected to the sucker rods is a downhole pump. The improved method and apparatus comprises using tubing sections having abrasion resistent polymer liners disposed within the inside bore of the tubing to eliminate contact between said sucker rods and tubing string when said sucker rods are bring reciprocated.

The preferred polymer liner material is polyethylene, especially high and ultra-high density polyethylene materials. A preferred method of disposing the polymer liners within the tubing sections includes providing a liner having a greater outer diameter than the inner diameter of the tubing, mechanically reducing the outer diameter of the liner by rollers or other known means, and pushing the liner into the tubing bore.

BRIEF DESCRIPTION OF THE DRAWINGS

For a more complete description of the present invention and the advantages thereof, reference is now made to the following description taken in conjunction with the accompanying drawings in which:

FIG. 1 is a typical rod pumping system, and

FIG. 2 is a sectional view of coupled, polymer lined tubing joints.

DETAILED DESCRIPTION

The present invention relates to the use of polymer lined tubing strings to reduce the frictional forces between the reciprocating rods and the tubing string in a rod pumped well. To better understand the present invention a brief description of a typical rod pumping system is provided below.

Referring to FIG. 1, a rod pumping system, generally indicated by reference numeral **10**, includes a walking beam horsehead **12** for reciprocating a polished rod **14** which is connected to the horsehead by cable **16**. Polished rod **14** extends through a stuffing box **18**. A string of sucker rods **20** connected together by couplings **22** hangs from polished rod **14** within a tubing string **24** located in a casing **26**. The sucker rods **20** are connected to a subsurface pump **28**. In a reciprocation cycle of the structure, including the horsehead **12**, polished rod **14** and sucker rods **20**, well fluids are lifted on the upstroke. As one would expect, the up and down movement of the rods within the tubing string frequently creates substantial metal to metal contact between the tubing string and the rods and rod couplings which often results in failures due to rod wear, rod coupling wear, and/or production tubing string wear. This problem and other problems inherent in rod-pumped wells are substantially eliminated or reduced by the present invention described in detail below.

In the exemplary embodiment of the present invention shown in FIG. 2, two joints of metal tubing **30**, having an

inner diameter **32** and outer diameter **34**, are connected together by coupling **36**. Disposed within each tubing joint **30** adjacent its inner surface **38** is a polymer liner **40**. Polymer liners, which are typically manufactured by extrusion methods, are well known in the field and are readily available. The liner **40** may be disposed within the tubing **30** by any one of several methods known in the art. A preferred method of disposing the liner within the tubing bore is to provide a polymer liner having an outer diameter which is slightly greater than the inner diameter of the tubing section pipe having an outside diameter larger than the internal diameter of the tubing, reduce the outside diameter of the liner and insert the reduced diameter liner within the tubing. After the liner is in place it will attempt to substantially return to its original shape and will become secured within the tubing section. Those skilled in the art will recognize that numerous methods of reducing the outside diameter of the liner for insertion into a tubing section are available. For example, rollers may be used to mechanically reduce the outside diameter of the liner by the desired amount and to push the liner into the tubing joint. Other methods include pulling the liner through a sizing sleeve or orifice and pushing the reduced diameter liner into place in the tubing section.

The polymer liner **40** is constructed of a durable, abrasion resistant polymer material such as a polyethylene. High density, high and ultra-high molecular weight polyethylene pipe is preferred since it is extremely resistent to abrasive forces such as those caused by sucker rods and rod couplings in a rod pumped well. In addition to providing abrasion resistance and coefficients of friction superior to that of steel tubing, high density polyethylene polymer materials exhibit excellent self-lubricating and/or wet-lubricating characteristics thereby increasing pumping efficiency. High and ultra-high density polyethylene and high and ultra-high molecular weight polyethylene are well defined in the industry by their molecular structure and weight. Suitable polyethylene materials are disclosed in U.S. Pat. No. 4,938,285 which is hereby incorporated by reference.

The liner **42** should be sufficiently thick to provide reasonable longevity to the tubing string. Preferably, the liner thickness ranges from about 140 to about 200 millimeters. The optimum thickness of the liner will depend on the size of the tubing being used since the liner will reduce the effective inside diameter of the tubing string which affects the sizing of the pump which can be used. In the exemplary embodiment shown in FIG. 2, the thickness "t" of the liner **42** is about 150 millimeters.

It should be recognized that the present invention also provides several other benefits and advantages over conventional non-lined tubing. For example, paraffin build up is reduced since the polymer liner will provide an insulation of the production string thereby reducing the temperature loss in the production string from the bottom of the well to the well head, resulting in a reduced deposition of paraffin. Further, the present invention permits the use of a lower grade tubing than would ordinarily be utilized as the production tubing string in an oil well produced by rod pumping.

The lined tubing of the present invention may also be effectively used in combination with rod guides and/or rod coupling shields well known in the art, depending upon the well depth, deviation of the hole, rod action and other factors, to minimize the contact between the rods and/or rod couplings and the tubing walls. For example, suitable rod guides which may be used in conjunction with the polymer lined tubing of the present invention are disclosed in U.S. Pat. No. 4,938,285.

While the preferred embodiments of the invention have been described above, it will be recognized and understood that various modifications of material and form may be made and the appended claims are intended to cover all such modifications which may fall within the spirit and scope of the invention.

Having described my invention with the particularity set forth above, what is claimed is:

1. An improved method of producing well fluids from a well being produced by a rod pumping system, said rod pumping system comprising: a plurality of sucker rods disposed within a string of tubing which extends into said well, said string of tubing comprising of a plurality of tubing sections each having a bore and an inside diameter; a down hole pump operably connected to said sucker rods; and means for reciprocating said sucker rods, wherein the improved method comprises using tubing sections having polymer liners disposed within said bore of said tubing sections to eliminate contact between said sucker rods and said tubing string when said sucker rods are being reciprocated.

2. An improved method of producing well fluids from a well being produced by a rod pumping system, said rod pumping system comprising: a plurality of sucker rods disposed within a string of tubing which extends into said well, said string of tubing comprising of a plurality of tubing sections each having a bore and an inside diameter; a down hole pump operably connected to said sucker rods; and means for reciprocating said sucker rods, wherein the improved method comprises using tubing sections having polymer liners disposed within said bore of said tubing sections to eliminate contact between said sucker rods and said tubing string when said sucker rods are being reciprocated, wherein said liners comprise a polyethylene material.

3. The invention as defined in claim **2** wherein said polyethylene liners comprise a high or ultra-high density polyethylene material.

4. The invention as defined in claim **2** wherein said polyethylene liners have a thickness of between about 140 and about 200 millimeters.

5. The invention as defined in claim **2** wherein said polyethylene liners have been disposed within said bores of said tubing sections by providing a liner having an outside diameter greater than the inside diameter of said tubing section, reducing the outside diameter of said liner and inserting said liner within said bore of said tubing section.

6. An improved rod pumping system for producing well fluids from a well said rod pumping system comprising:

a. a plurality of sucker rods disposed within a string of tubing which extends into said well, said string of tubing comprising of a plurality of tubing sections each having a bore and an inside diameter;

b. a down hole pump operably connected to said sucker rods;

c. means for reciprocating said sucker rods;

d. said tubing sections having polymer liners disposed within said bore of said tubing sections to eliminate contact between said sucker rods and said tubing string when said sucker rods are being reciprocated.

7. An improved rod pumping system for producing well fluids from a well said rod pumping system comprising:

a. a plurality of sucker rod disposed within a string of tubing which extends into said well, said string of tubing comprising of a plurality of tubing sections each having a bore and an inside diameter;

b. a down hole pump operably connected to said sucker rods;

c. means for reciprocating said sucker rods;

d. said tubing sections having polymer liners disposed within said bore of said tubing sections to eliminate contact between said sucker rods and said tubing string when said sucker rods are being reciprocated, wherein said liners comprise a polyethylene material.

8. The invention as defined in claim **7** wherein said liners comprise a high or ultra-high density polyethylene material.

9. The invention as defined in claim **7** wherein said polyethylene liners have a thickness of between about 140 and about 200 millimeters.

10. The invention as defined in claim **7** wherein said polyethylene liners have been disposed within said bores of said tubing sections by providing a liner having an outside diameter greater than the inside diameter of said tubing section, reducing the outside diameter of said liner and inserting said liner within said bore of said tubing section.

11. An improved method of producing well fluids from a well being produced by a rod-pumping system said rod-pumping system comprising: a plurality of sucker rods disposed within a string of tubing which extends into said well said string of tubing comprising of a plurality of tubing sections each having a bore and an inside diameter; and a down-hole pump operably connected to said sucker rods, wherein the improved method comprises using tubing sections having polymer liners disposed within said bore of said tubing sections to eliminate contact between said sucker rods and said tubing string when said sucker rods are being moved relative to said string of tubing to produce fluids from said well.

12. The invention defined in claim 11, said polymer liners comprising a polyethylene material.

13. The invention defined in claim 12 wherein said polyethylene material comprises a high or ultra high density polyethylene material.

14. The invention as defined in claim 12 wherein said polyethylene liners have a thickness of between about 140 and about 200 millimeters.

15. The invention as defined in claim 12 wherein said polyethylene liners have been disposed within said bores of said tubing sections by providing a liner having an outside diameter greater than the inside diameter of said tubing section, reducing the outer diameter of said liner and inserting said liner within said bore of said tubing section.

16. An improved rod-pumping system for producing well fluids from a well said rod-pumping system comprising:

a. a plurality of sucker rods disposed within a string of tubing which extends into said well said string of tubing comprising of a plurality of tubing sections each having a bore and an inside diameter;

b. a down-hole pump operably connected to said sucker rods to produce fluid from said well when said sucker rods are moved relative to said tubing sections; and

c. said tubing sections having polymer liners disposed within said bore of said tubing sections to eliminate contact between said sucker rods and said tubing string when said sucker rods are being moved relative to said string of tubing.

17. The invention as defined in claim 16 wherein said polymer liners comprise a polyethylene material.

18. The invention as defined in claim 17 wherein said polyethylene material comprises a high or ultra high density polyethylene material.

19. The invention as defined in claim 17 wherein said polyethylene liners have a thickness of between about 140 and about 200 millimeters.

20. The invention as defined in claim 17 wherein said polyethylene liners have been disposed within said bores of said tubing sections by providing a liner having an outside diameter greater than the inside diameter of said tubing section reducing the outside diameter of said liner and inserting said liner within said bore of said tubing section.

* * * * *

JS 44 (Rev. 12/12)

CIVIL COVER SHEET

The JS 44 civil cover sheet and the information contained herein neither replace nor supplement the filing and service of pleadings or other papers as required by law, except as provided by local rules of court. This form, approved by the Judicial Conference of the United States in September 1974, is required for the use of the Clerk of Court for the purpose of initiating the civil docket sheet. *(SEE INSTRUCTIONS ON NEXT PAGE OF THIS FORM.)*

I. (a) PLAINTIFFS
Western Falcon, Inc. and
Wagon Trail Ventures, Inc.

(b) County of Residence of First Listed Plaintiff _____
(EXCEPT IN U.S. PLAINTIFF CASES)

(c) Attorneys *(Firm Name, Address, and Telephone Number)*
The Elliott Law Firm
6750 West Loop South, Suite 995, Bellaire, TX 77401
(832) 485-3560

DEFENDANTS
Moore Rod & Pipe, LLC and
Moore Pipe Inc.

County of Residence of First Listed Defendant Harris
(IN U.S. PLAINTIFF CASES ONLY)

NOTE: IN LAND CONDEMNATION CASES, USE THE LOCATION OF THE TRACT OF LAND INVOLVED.

Attorneys *(If Known)*

II. BASIS OF JURISDICTION *(Place an "X" in One Box Only)*

- ☐ 1 U.S. Government Plaintiff
- ☒ 3 Federal Question *(U.S. Government Not a Party)*
- ☐ 2 U.S. Government Defendant
- ☐ 4 Diversity *(Indicate Citizenship of Parties in Item III)*

III. CITIZENSHIP OF PRINCIPAL PARTIES *(Place an "X" in One Box for Plaintiff and One Box for Defendant)*
(For Diversity Cases Only)

	PTF	DEF		PTF	DEF
Citizen of This State	☐ 1	☐ 1	Incorporated *or* Principal Place of Business In This State	☐ 4	☐ 4
Citizen of Another State	☐ 2	☐ 2	Incorporated *and* Principal Place of Business In Another State	☐ 5	☐ 5
Citizen or Subject of a Foreign Country	☐ 3	☐ 3	Foreign Nation	☐ 6	☐ 6

IV. NATURE OF SUIT *(Place an "X" in One Box Only)*

CONTRACT
- ☐ 110 Insurance
- ☐ 120 Marine
- ☐ 130 Miller Act
- ☐ 140 Negotiable Instrument
- ☐ 150 Recovery of Overpayment & Enforcement of Judgment
- ☐ 151 Medicare Act
- ☐ 152 Recovery of Defaulted Student Loans (Excludes Veterans)
- ☐ 153 Recovery of Overpayment of Veteran's Benefits
- ☐ 160 Stockholders' Suits
- ☐ 190 Other Contract
- ☐ 195 Contract Product Liability
- ☐ 196 Franchise

REAL PROPERTY
- ☐ 210 Land Condemnation
- ☐ 220 Foreclosure
- ☐ 230 Rent Lease & Ejectment
- ☐ 240 Torts to Land
- ☐ 245 Tort Product Liability
- ☐ 290 All Other Real Property

TORTS

PERSONAL INJURY
- ☐ 310 Airplane
- ☐ 315 Airplane Product Liability
- ☐ 320 Assault, Libel & Slander
- ☐ 330 Federal Employers' Liability
- ☐ 340 Marine
- ☐ 345 Marine Product Liability
- ☐ 350 Motor Vehicle
- ☐ 355 Motor Vehicle Product Liability
- ☐ 360 Other Personal Injury
- ☐ 362 Personal Injury - Medical Malpractice

PERSONAL INJURY
- ☐ 365 Personal Injury - Product Liability
- ☐ 367 Health Care/ Pharmaceutical Personal Injury Product Liability
- ☐ 368 Asbestos Personal Injury Product Liability

PERSONAL PROPERTY
- ☐ 370 Other Fraud
- ☐ 371 Truth in Lending
- ☐ 380 Other Personal Property Damage
- ☐ 385 Property Damage Product Liability

CIVIL RIGHTS
- ☐ 440 Other Civil Rights
- ☐ 441 Voting
- ☐ 442 Employment
- ☐ 443 Housing/ Accommodations
- ☐ 445 Amer. w/Disabilities - Employment
- ☐ 446 Amer. w/Disabilities - Other
- ☐ 448 Education

PRISONER PETITIONS

Habeas Corpus:
- ☐ 463 Alien Detainee
- ☐ 510 Motions to Vacate Sentence
- ☐ 530 General
- ☐ 535 Death Penalty

Other:
- ☐ 540 Mandamus & Other
- ☐ 550 Civil Rights
- ☐ 555 Prison Condition
- ☐ 560 Civil Detainee - Conditions of Confinement

FORFEITURE/PENALTY
- ☐ 625 Drug Related Seizure of Property 21 USC 881
- ☐ 690 Other

LABOR
- ☐ 710 Fair Labor Standards Act
- ☐ 720 Labor/Management Relations
- ☐ 740 Railway Labor Act
- ☐ 751 Family and Medical Leave Act
- ☐ 790 Other Labor Litigation
- ☐ 791 Employee Retirement Income Security Act

IMMIGRATION
- ☐ 462 Naturalization Application
- ☐ 465 Other Immigration Actions

BANKRUPTCY
- ☐ 422 Appeal 28 USC 158
- ☐ 423 Withdrawal 28 USC 157

PROPERTY RIGHTS
- ☐ 820 Copyrights
- ☒ 830 Patent
- ☐ 840 Trademark

SOCIAL SECURITY
- ☐ 861 HIA (1395ff)
- ☐ 862 Black Lung (923)
- ☐ 863 DIWC/DIWW (405(g))
- ☐ 864 SSID Title XVI
- ☐ 865 RSI (405(g))

FEDERAL TAX SUITS
- ☐ 870 Taxes (U.S. Plaintiff or Defendant)
- ☐ 871 IRS—Third Party 26 USC 7609

OTHER STATUTES
- ☐ 375 False Claims Act
- ☐ 400 State Reapportionment
- ☐ 410 Antitrust
- ☐ 430 Banks and Banking
- ☐ 450 Commerce
- ☐ 460 Deportation
- ☐ 470 Racketeer Influenced and Corrupt Organizations
- ☐ 480 Consumer Credit
- ☐ 490 Cable/Sat TV
- ☐ 850 Securities/Commodities/ Exchange
- ☐ 890 Other Statutory Actions
- ☐ 891 Agricultural Acts
- ☐ 893 Environmental Matters
- ☐ 895 Freedom of Information Act
- ☐ 896 Arbitration
- ☐ 899 Administrative Procedure Act/Review or Appeal of Agency Decision
- ☐ 950 Constitutionality of State Statutes

V. ORIGIN *(Place an "X" in One Box Only)*

- ☒ 1 Original Proceeding
- ☐ 2 Removed from State Court
- ☐ 3 Remanded from Appellate Court
- ☐ 4 Reinstated or Reopened
- ☐ 5 Transferred from Another District *(specify)*
- ☐ 6 Multidistrict Litigation

VI. CAUSE OF ACTION

Cite the U.S. Civil Statute under which you are filing *(Do not cite jurisdictional statutes unless diversity)*:
15 U.S.C. 1125(a) and 35 U.S.C. 271(b)

Brief description of cause:
False advertising under Lanham Act and inducement of patent infringement

VII. REQUESTED IN COMPLAINT:

☐ CHECK IF THIS IS A CLASS ACTION UNDER RULE 23, F.R.Cv.P.

DEMAND $

CHECK YES only if demanded in complaint:
JURY DEMAND: ☒ Yes ☐ No

VIII. RELATED CASE(S) IF ANY

(See instructions): JUDGE _____ DOCKET NUMBER _____

DATE
10/08/2013

SIGNATURE OF ATTORNEY OF RECORD
/s/Douglas H. Elliott

FOR OFFICE USE ONLY

RECEIPT # _____ AMOUNT _____ APPLYING IFP _____ JUDGE _____ MAG. JUDGE _____